ΜΟΝΤΕΛΑ WZT – ΓΕΝΙΚΕΣ ΔΙΑΣΤΑΣΕΙΣ& ΚΙΛΑ

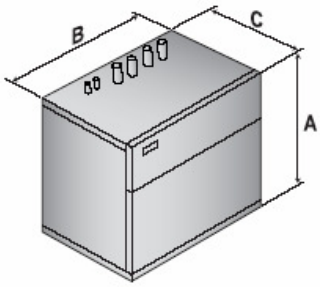

WZT	A (mm)	B (mm)	C (mm)	Kg
06	940	700	570	80
08	940	700	570	83
10M	940	700	570	95
10T	940	700	570	95
14M	940	700	570	112
14T	940	700	570	112
21	940	700	570	125
26	940	700	570	138
36	1280	1003	633	144
46	1280	1003	633	153

WZT/SW6	A (mm)	B (mm)	C (mm)	Kg
06	940	700	570	83
08	940	700	570	86
10M	940	700	570	98
10T	940	700	570	98
14M	1280	1003	633	115
14T	1280	1003	633	115
21	1280	1003	633	128
26	1280	1003	633	142
36	1280	1003	633	148
46	1280	1003	633	157

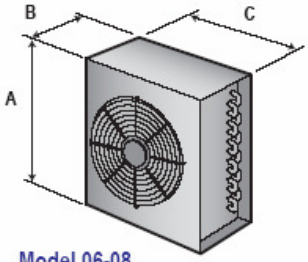

Model 06-08

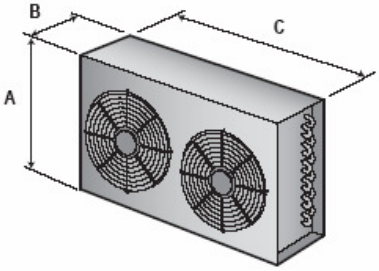

Mod.	A (mm)	B (mm)	C (mm)	Kg
06	1230	600	1500	79
08	1230	600	1500	79
10M	1230	600	1500	79
10T	1230	600	1500	79
14M	1370	800	1910	145
14T	1370	800	1910	145
21	2630	600	1230	150
26	2630	600	1230	150
36	2630	600	1230	183
46	3230	800	1370	279

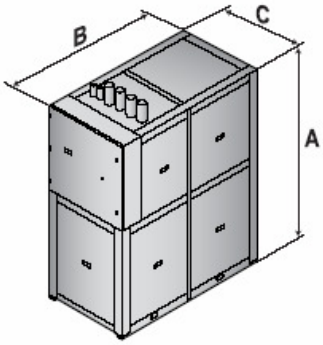

Mod.	A (mm)	B (mm)	C (mm)	Kg
52	1855	800	800	455
72	1855	800	800	475
82	1855	800	800	485
92	1855	1478	800	575

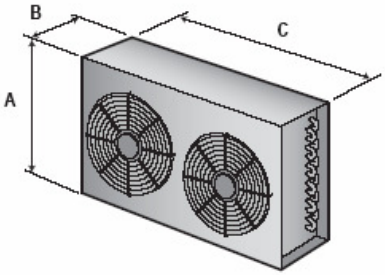

Mod.	A (mm)	B (mm)	C (mm)	Kg
52	3230	800	1370	302
72	Contact The Company			
82				
92				

ΚΑΘΕ ΜΟΝΑΔΑ ΑΠΟΤΕΛΕΙΤΑΙ ΑΠΟ ΕΣΩΤΕΡΙΚΟ & ΕΞΩΤΕΡΙΚΟ ΜΕΡΟΣ

ΜΟΝΤΕΛΑ WZT 06 ΕΩΣ 10

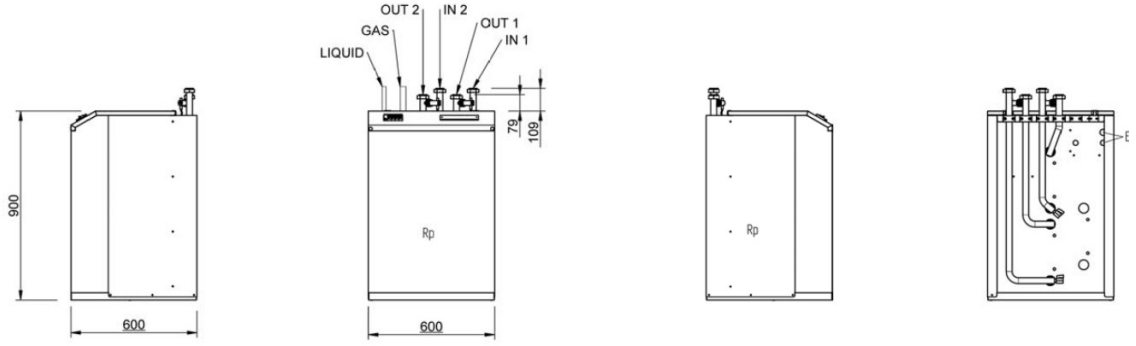

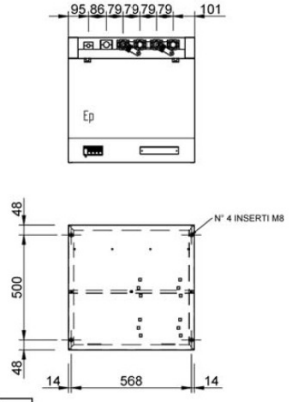

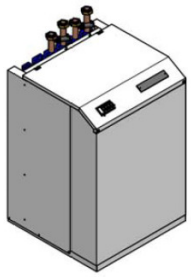

Rp	PANNELLO ASPORTABILE REMOVABLE PANEL
Ep	QUADRO ELETTRICO ELECTRICAL PANEL
Es	INGRESSO ALIMENTAZIONE ELETTRICA POWER SUPPLY DRAIN INLET
GAS	LINEA GAS GAS LINE
LIQUID	LINEA LIQUIDO LIQUID LINE
IN 1 1 1/4"GF	INGRESSO ACQUA UTENTE USER WATER INLET
OUT 1 1 1/4"GF	USCITA ACQUA UTENTE USER WATER OUTLET
IN 2 1 1/4"GF	INGRESSO ACQUA CALDA SANITARIA DOMESTIC HOT WATER INLET
OUT 2 1 1/4"GF	USCITA ACQUA CALDA SANITARIA DOMESTIC HOT WATER OUTLET

	WZT 06	WZT 08	WZT 10
GAS	Ø12	Ø16	Ø16
LIQUID	Ø10	Ø12	Ø12

ΜΟΝΤΕΛΑ WZT 14 ΕΩΣ 21

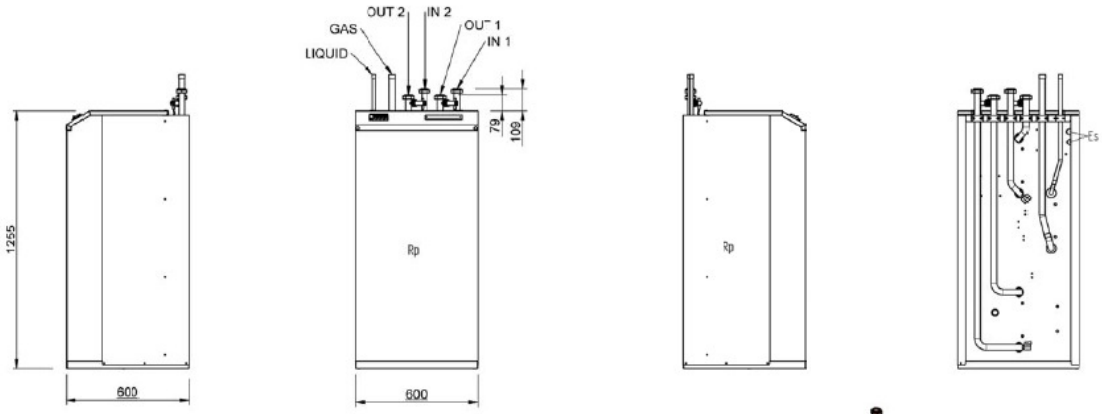

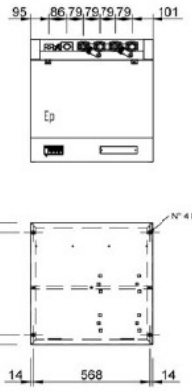

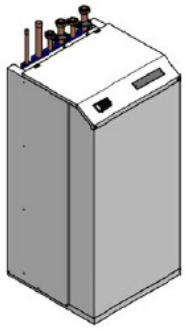

Rp	PANNELLO ASPORTABILE REMOVABLE PANEL
Ep	QUADRO ELETTRICO ELECTRICAL PANEL
Es	INGRESSO ALIMENTAZIONE ELETTRICA POWER SUPPLY DRAIN INLET
GAS	LINEA GAS GAS LINE
LIQUID	LINEA LIQUIDO LIQUID LINE
IN 1 1 1/4"GF	INGRESSO ACQUA UTENTE USER WATER INLET
OUT 1 1 1/4"GF	USCITA ACQUA UTENTE USER WATER OUTLET
IN 2 1 1/4"GF	INGRESSO ACQUA CALDA SANITARIA DOMESTIC HOT WATER INLET
OUT 2 1 1/4"GF	USCITA ACQUA CALDA SANITARIA DOMESTIC HOT WATER OUTLET

	WZT 14	WZT21
GAS	Ø22	Ø28
LIQUID	Ø12	Ø16

ΟΨΕΙΣ/ΚΑΤΟΨΕΙΣ

ΜΟΝΤΕΛΟ WZT 26 -36

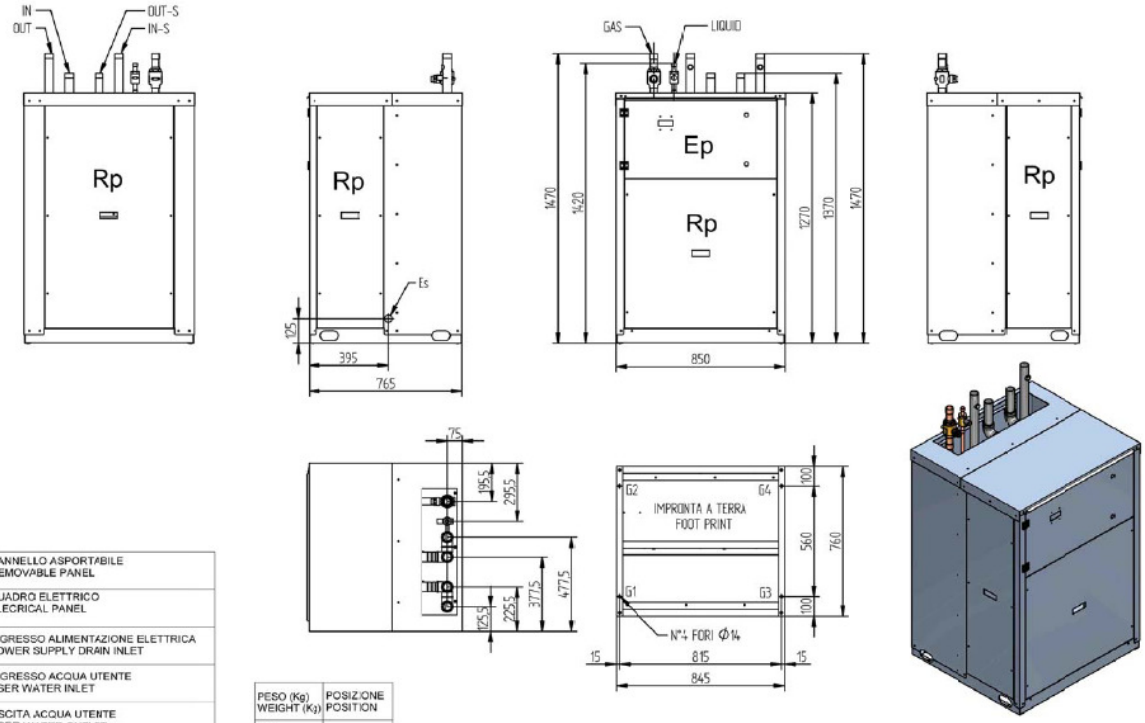

Rp	PANNELLO ASPORTABILE REMOVABLE PANEL
Ep	QUADRO ELETTRICO ELECRICAL PANEL
Es	INGRESSO ALIMENTAZIONE ELETTRICA POWER SUPPLY DRAIN INLET
IN Ø1"1/4	INGRESSO ACQUA UTENTE USER WATER INLET
OUT Ø1"1/4	USCITA ACQUA UTENTE USER WATER OUTLET
IN-S Ø1"1/4	NGRESSO ACQUA SANITARIA SANITARY WATER INLET
OUT-S Ø1"1/4	JSCITA ACQUA SANITARIA SANITARY WATER OUTLE

PESO (Kg) WEIGHT (Kg)	POSIZIONE POSITION
G1	
G2	
G3	
G4	

ΜΟΝΤΕΛΟ WZT 46-52-72-82-92

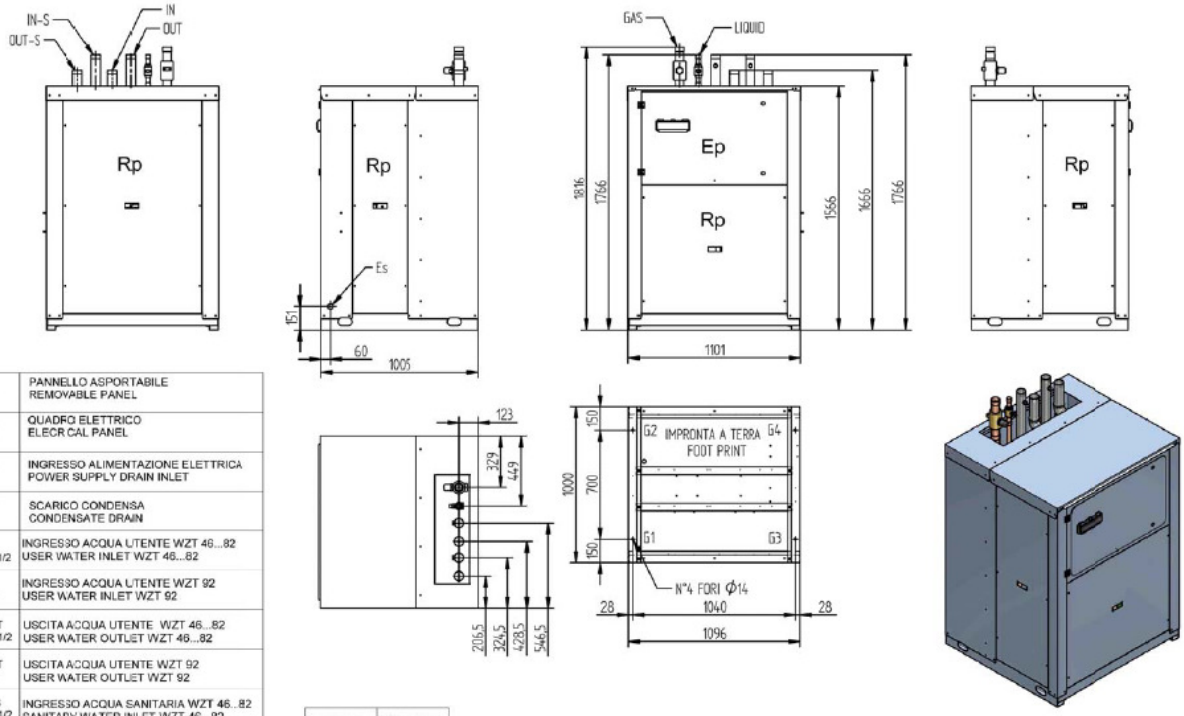

Rp	PANNELLO ASPORTABILE REMOVABLE PANEL
Ep	QUADRO ELETTRICO ELECR CAL PANEL
Es	INGRESSO ALIMENTAZIONE ELETTRICA POWER SUPPLY DRAIN INLET
Cd	SCARICO CONDENSA CONDENSATE DRAIN
IN Ø1"1/2	INGRESSO ACQUA UTENTE WZT 46...82 USER WATER INLET WZT 46...82
IN Ø2"	INGRESSO ACQUA UTENTE WZT 92 USER WATER INLET WZT 92
OUT Ø1"1/2	USCITA ACQUA UTENTE WZT 46...82 USER WATER OUTLET WZT 46...82
OUT Ø2"	USCITA ACQUA UTENTE WZT 92 USER WATER OUTLET WZT 92
IN-S Ø1"1/2	INGRESSO ACQUA SANITARIA WZT 46...82 SANITARY WATER INLET WZT 46...82
IN-S Ø2"	USCITA ACQUA SANITARIA WZT 92 SANITARY WATER OUTLET WZT 92
OUT-S Ø1"1/2	INGRESSO ACQUA SANITARIA WZT 46...82 SANITARY WATER INLET WZT 46...82
OUT-S Ø2"	USCITA ACQUA SANITARIA WZT 92 SANITARY WATER OUTLET WZT 92

PESO (Kg) WEIGHT (Kg)	POSIZIONE POSITION
G1	
G2	
G3	
G4	

ΜΟΝΤΕΛΟ WZT 6-8-10 STANDARD & LOW NOISE

DIMENSIONAL DRAWING
EVR STD (06-08-10)

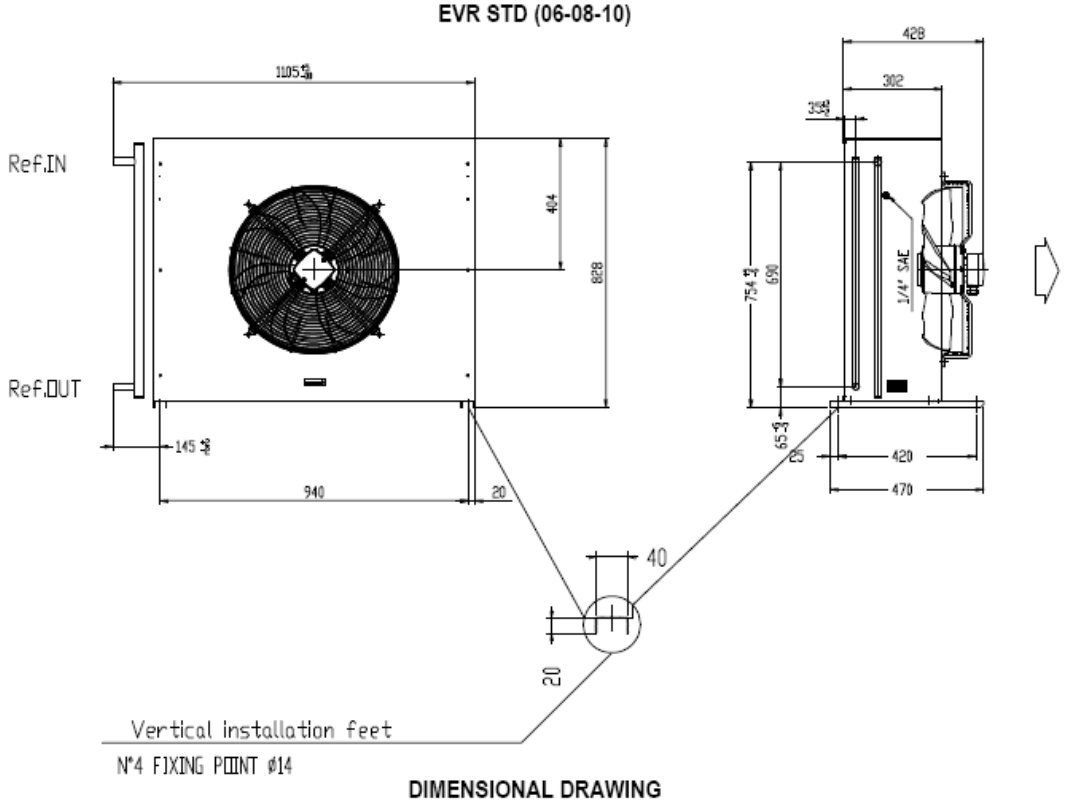

DIMENSIONAL DRAWING
EVR LS (06-08-10)

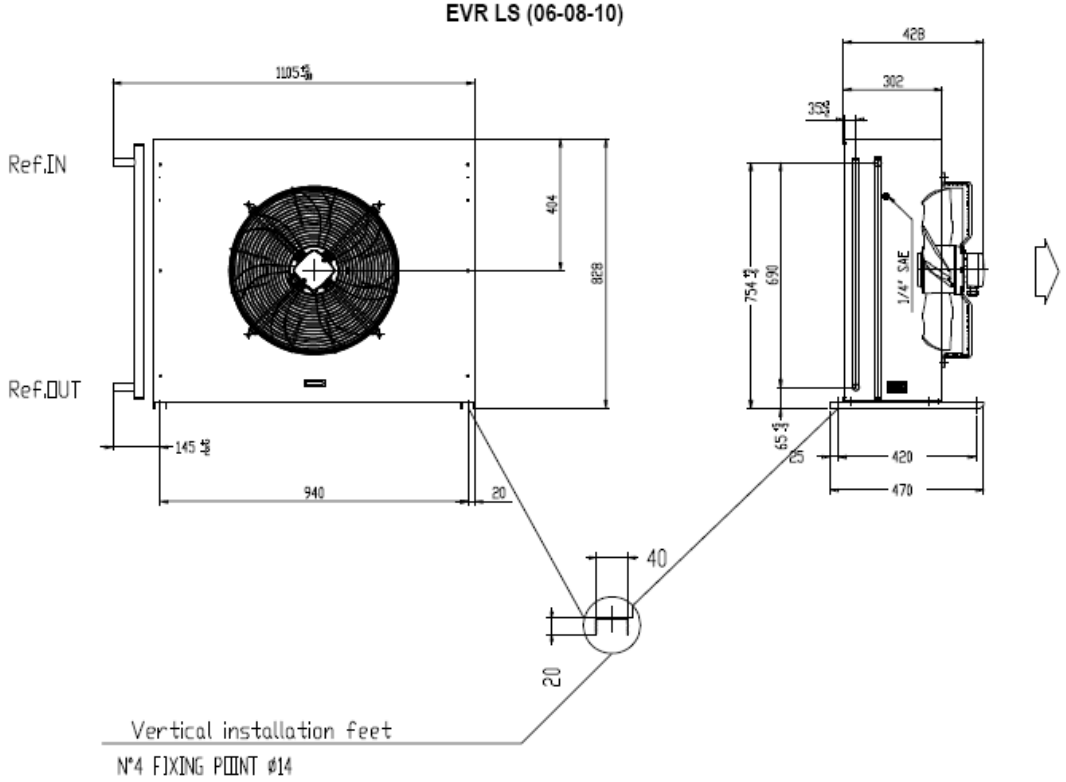

ΜΟΝΤΕΛΟ WZT 14 STANDARD & LOW NOISE

DIMENSIONAL DRAWING
EVR STD (14)

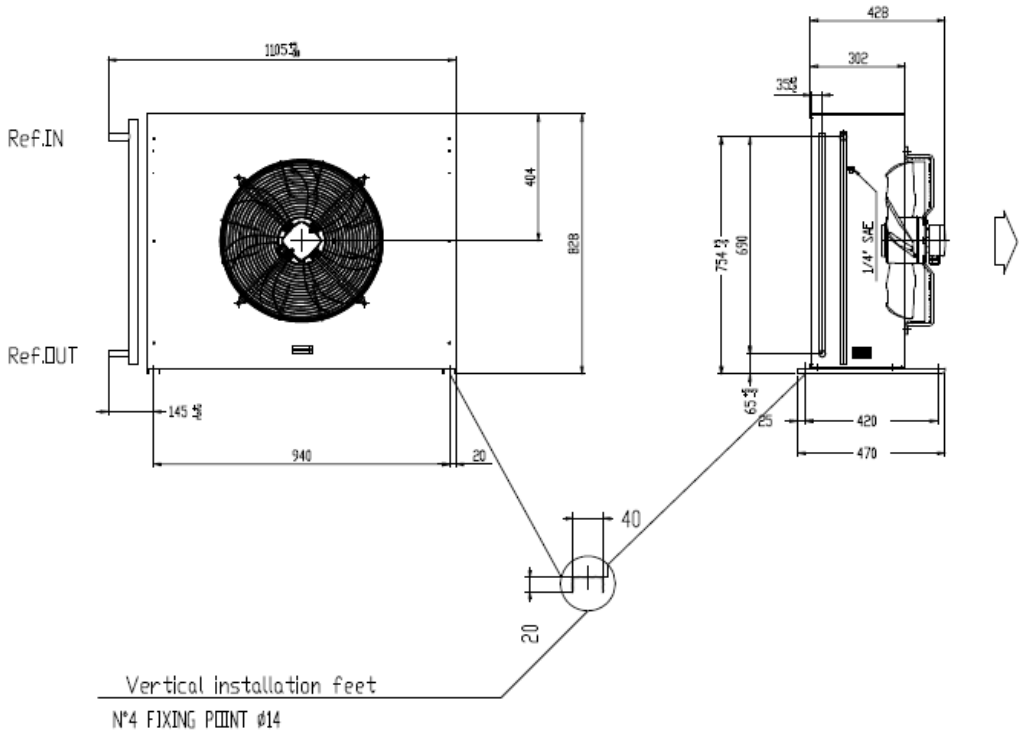

DIMENSIONAL DRAWING
EVR LS (14)

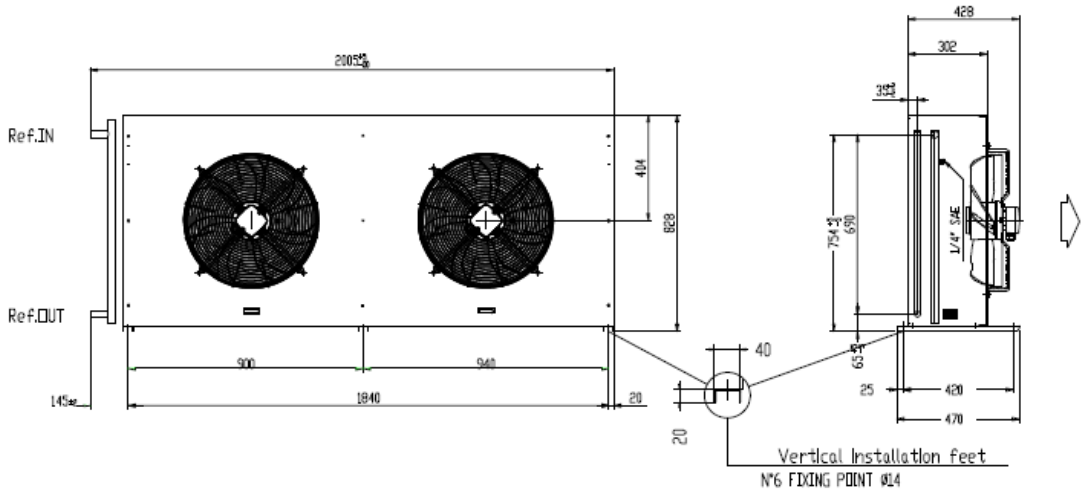

ΜΟΝΤΕΛΟ WZT 21 STANDARD & LOW NOISE

DIMENSIONAL DRAWING
EVR STD (21)

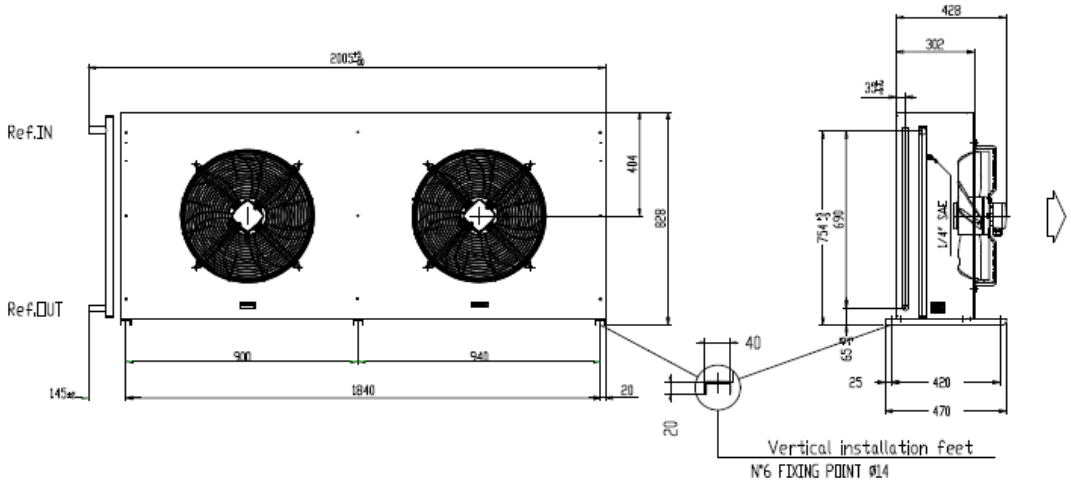

DIMENSIONAL DRAWING
EVR LS (21)

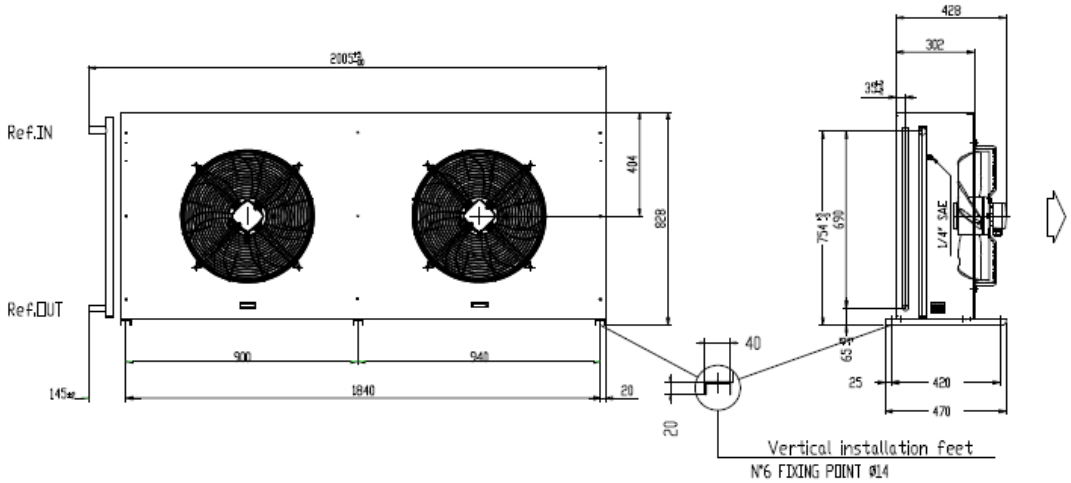

ΜΟΝΤΕΛΟ WZT 26 STANDARD & LOW NOISE

DIMENSIONAL DRAWING
EVR STD (26)

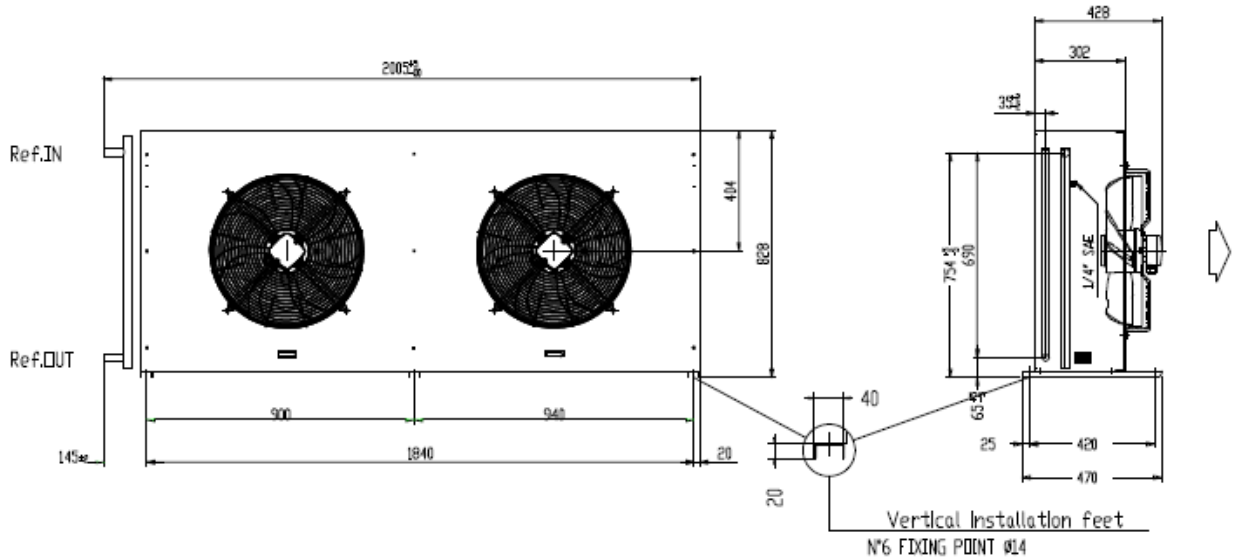

DIMENSIONAL DRAWING
EVR LS (26)

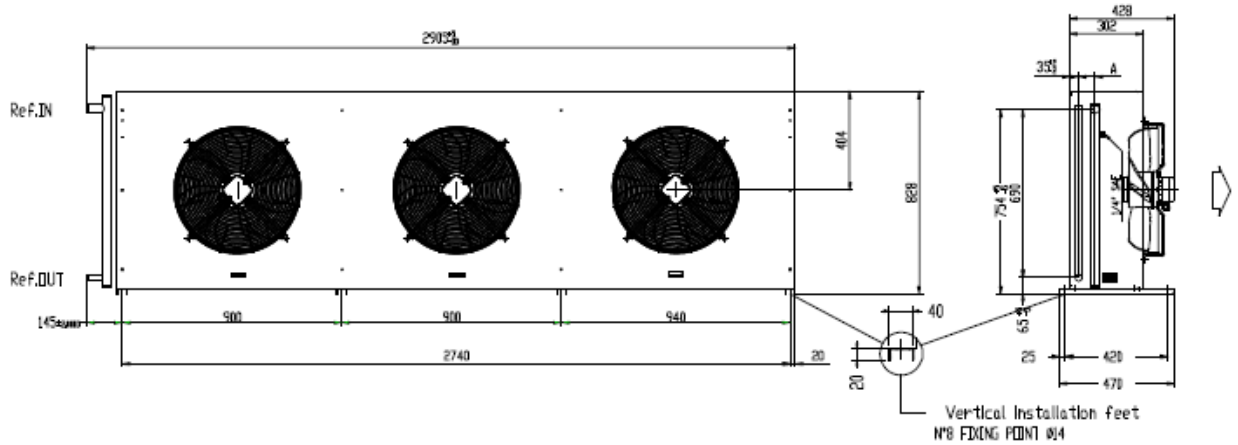

ΜΟΝΤΕΛΟ WZT 36 STANDARD & LOW NOISE

DIMENSIONAL DRAWING EVR STD (36)	DIMENSIONAL DRAWING' EVR LS (36)
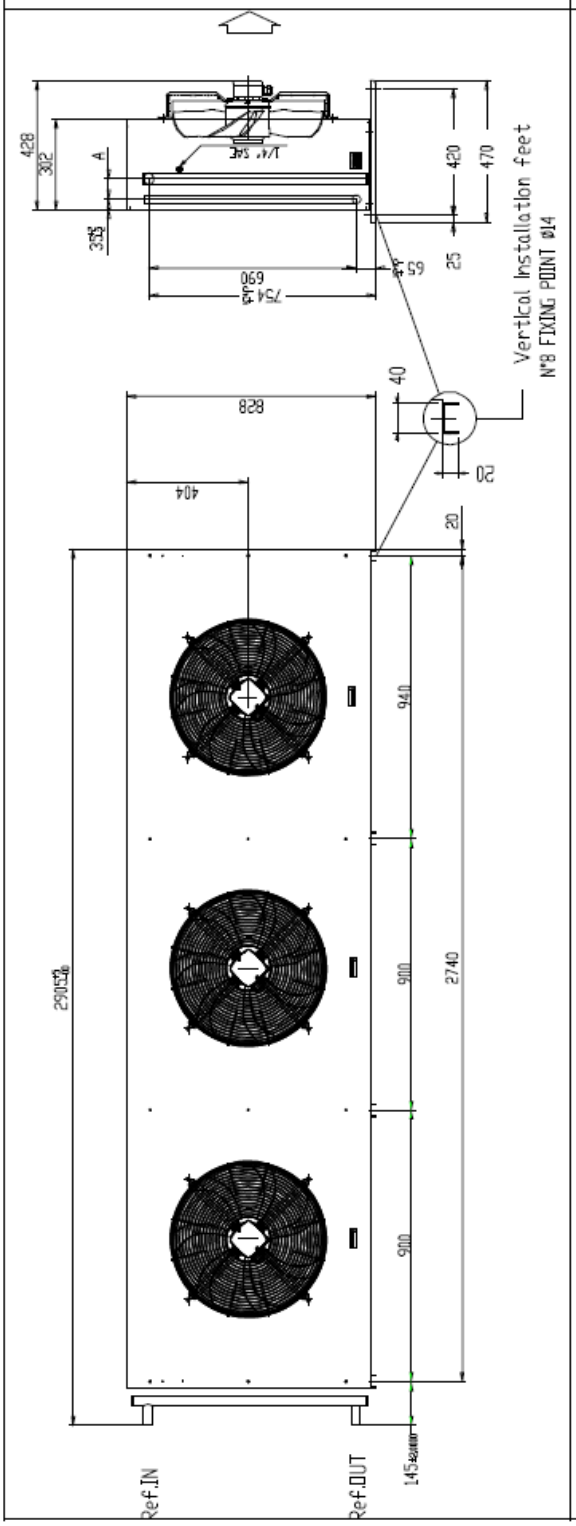	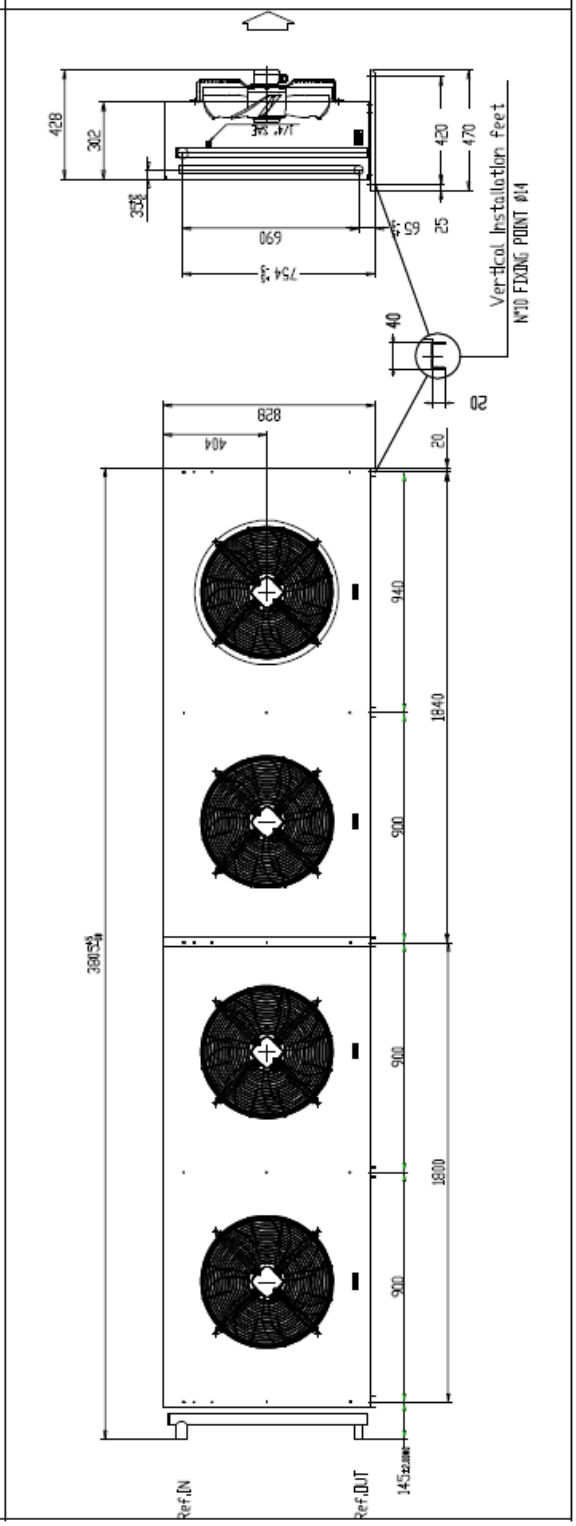

ΜΟΝΤΕΛΟ WZT 46 STANDARD & LOW NOISE

DIMENSIONAL DRAWING EVR STD (46)	DIMENSIONAL DRAWING EVR LS (46)
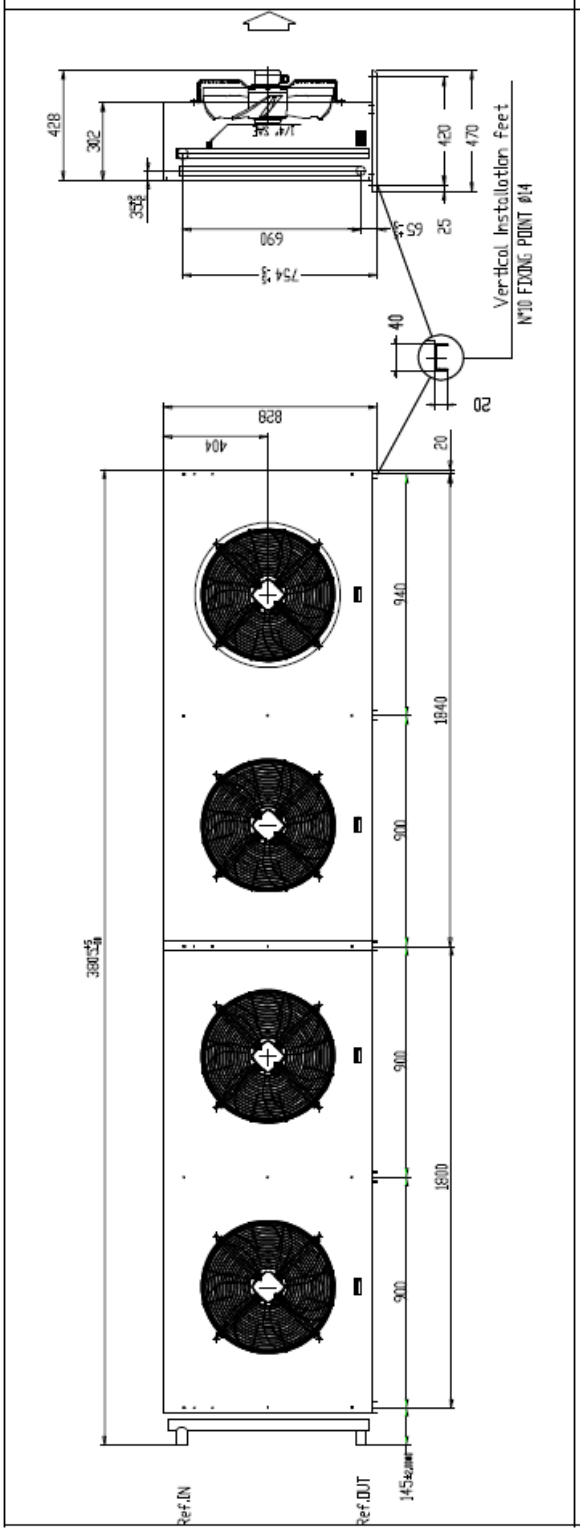	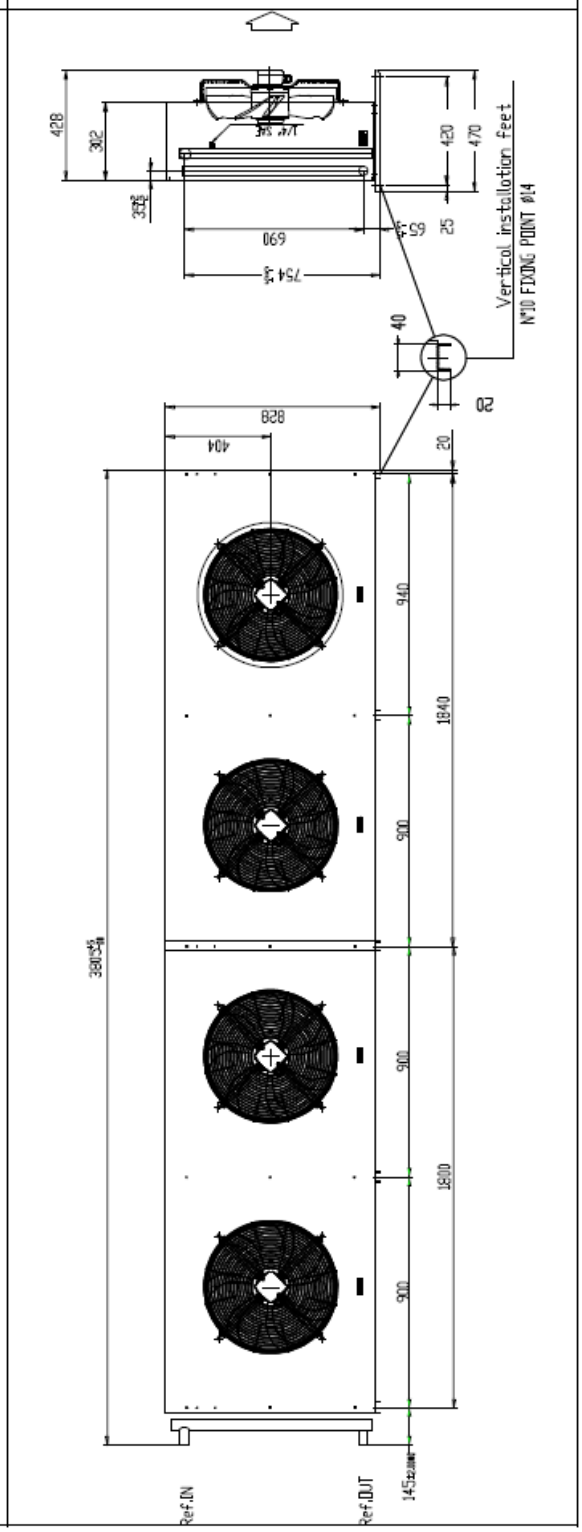

ΜΟΝΤΕΛΟ WZT 52 STANDARD & LOW NOISE

DIMENSIONAL DRAWING EVR STD (52)	DIMENSIONAL DRAWING EVR LS (52)
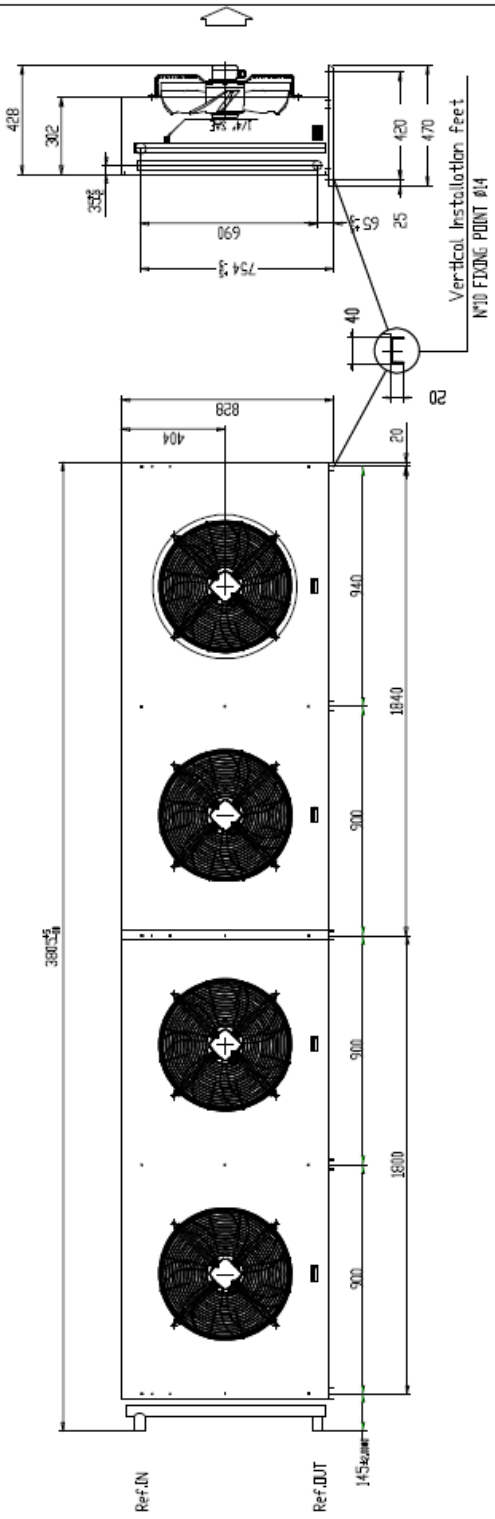	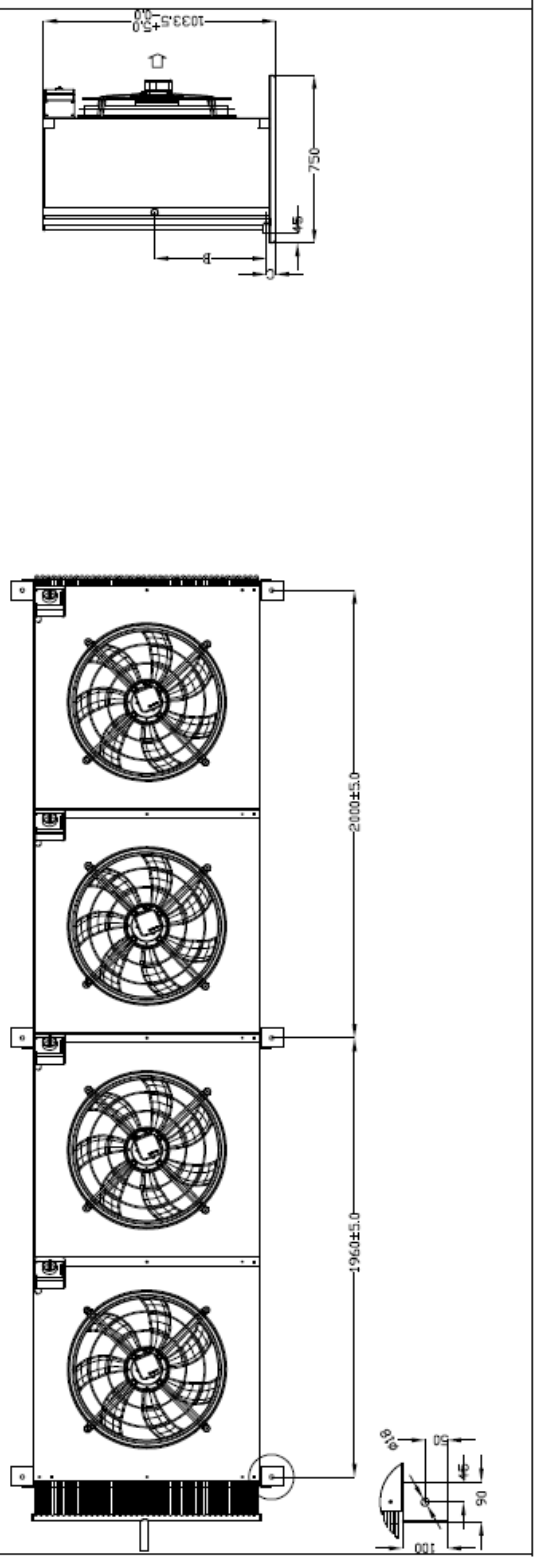

ΜΟΝΤΕΛΟ WZT 72 STANDARD & LOW NOISE

DIMENSIONAL DRAWING EVR STD (72)	DIMENSIONAL DRAWING EVR LS (72)
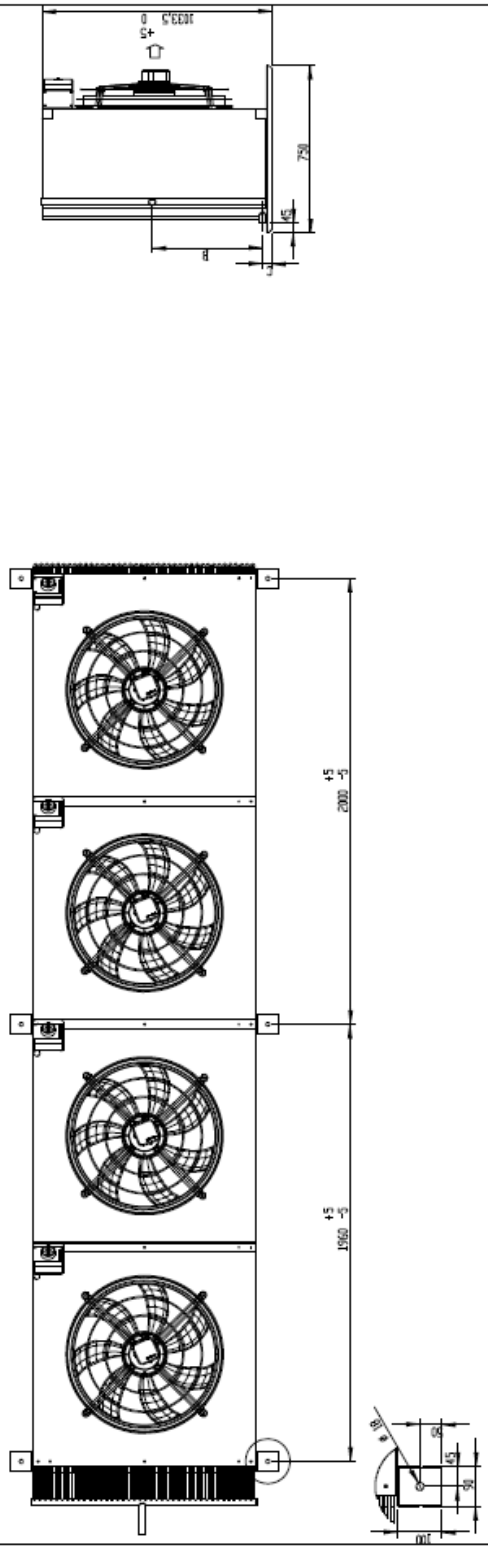	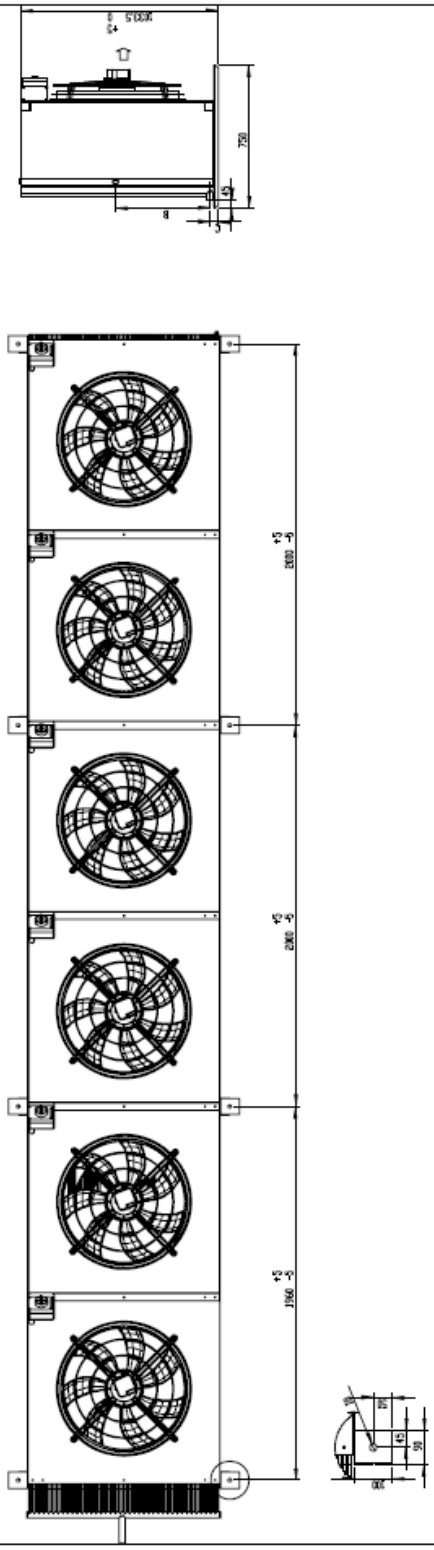

ΜΟΝΤΕΛΟ WZT 82 STANDARD & LOW NOISE
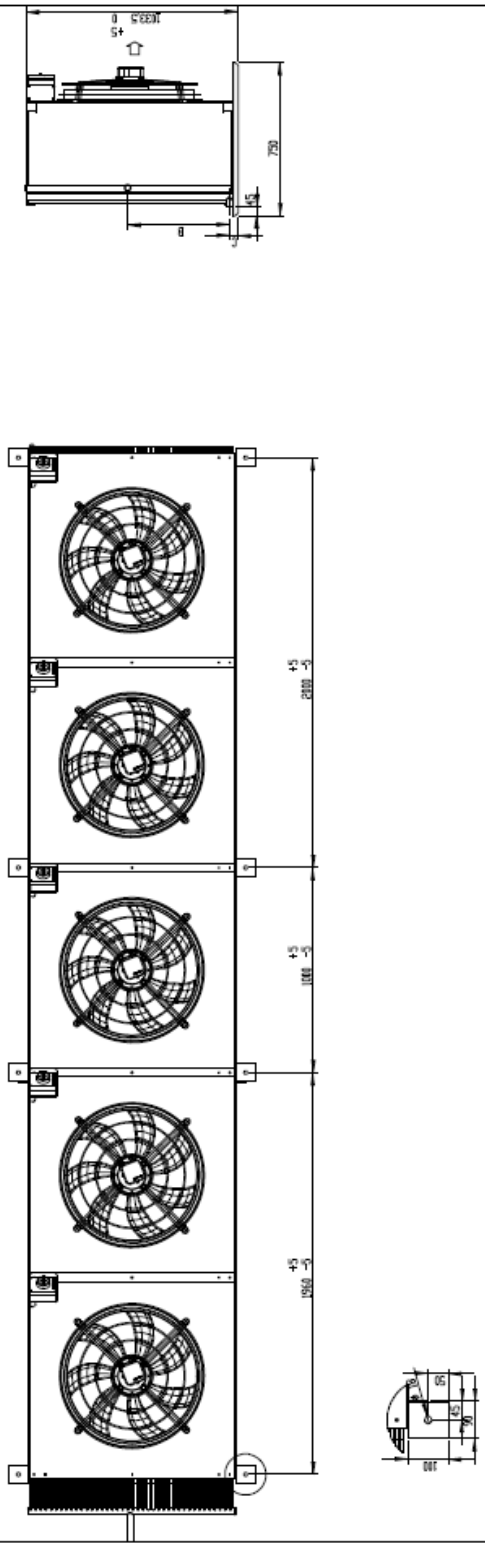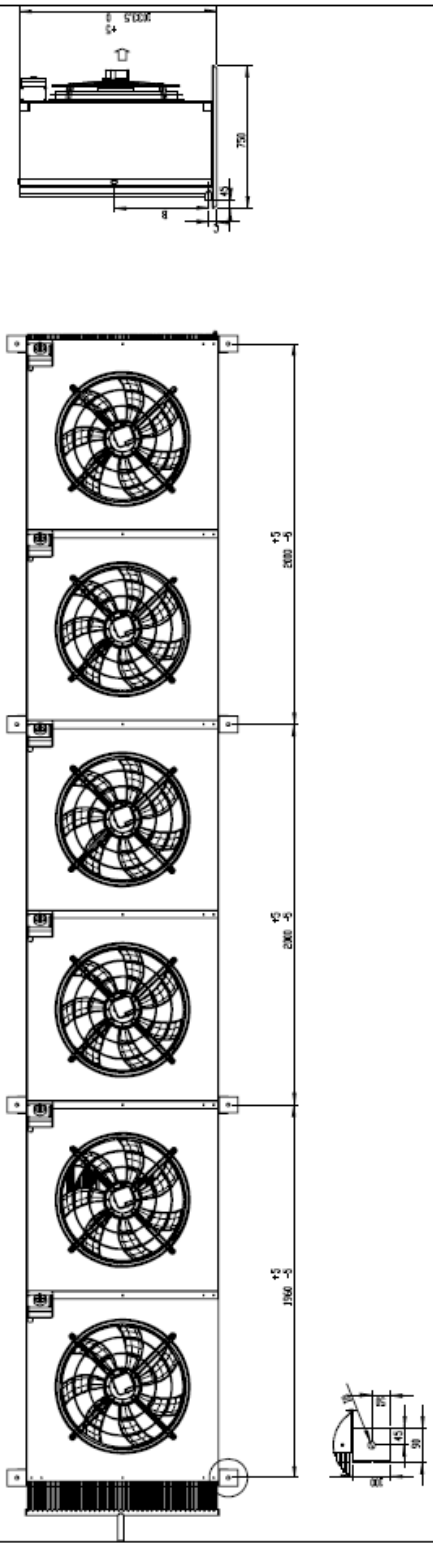
DIMENSIONAL DRAWING EVR STD (82)	DIMENSIONAL DRAWING EVR LS (82)